Operating Instructions

Magnetic Bike

MODEL:MB1502

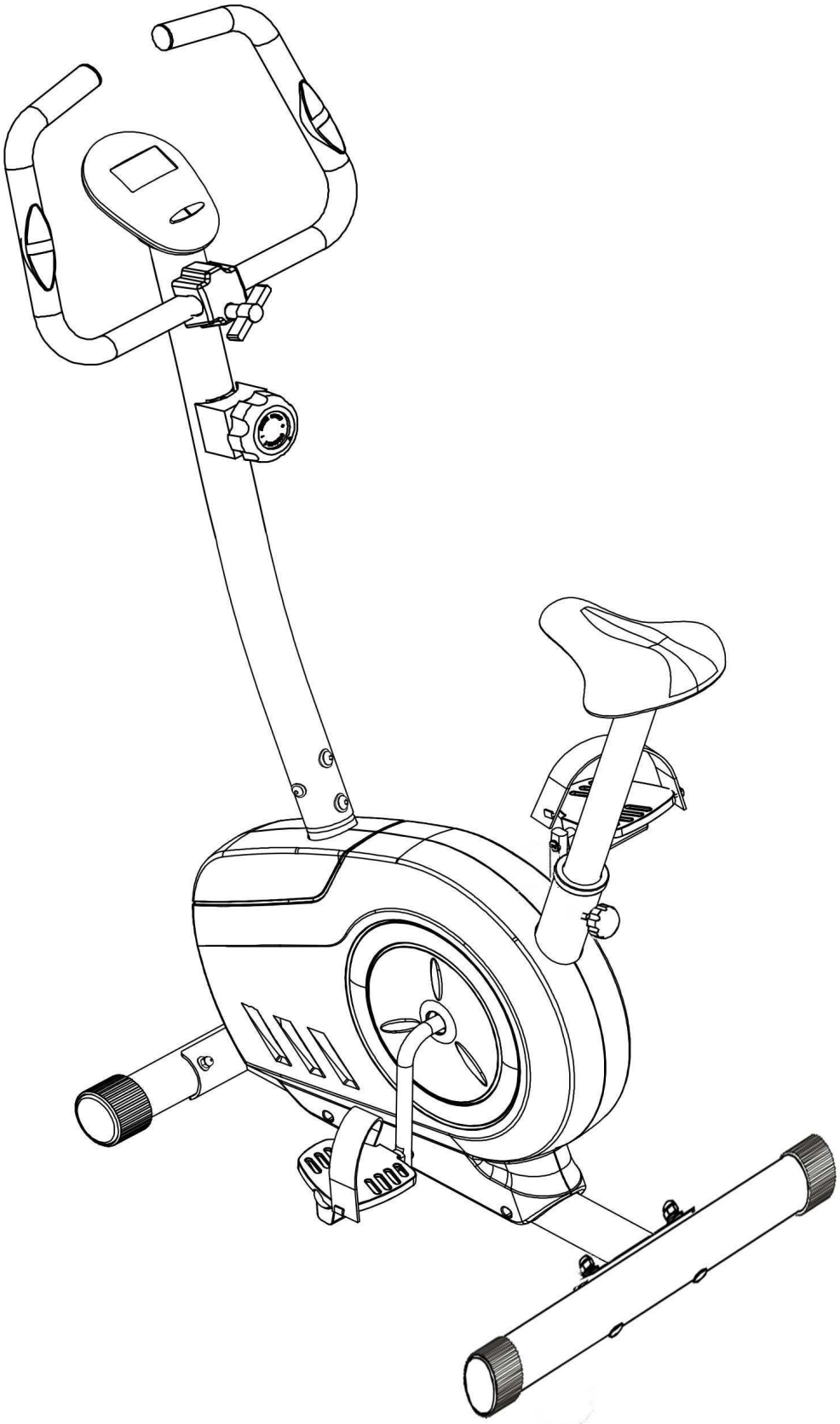

IMPORTANT SAFETY INFORMATION

1. Before you start to exercise, read the manual carefully, keep this manual for future reference.

2. Before beginning any exercise program you should consult your doctor first to determine if you have any medical or physical conditions that could put your health and safety at risk. Your doctor's advice is essential if you are taking medication that affects your heart rate, blood pressure or cholesterol level.

3. Be aware of your body's signals. Incorrect or excessive exercise can damage your health. If you feel dizziness, nausea, chest pain, back pain or other health symptoms stop the workout at once and consult your doctor before continuing.

4. Do not operate any exercise equipment if it is not assembled correctly. Also you must inspect your machine periodically to ensure your machine is in good condition. It is your responsibility to ensure that all users of the equipment are informed of all warnings and precautions.

5. Keep children and pets away from the equipment. The equipment is designed for adult use only. The equipment is not suitable for therapeutic use.

6. Before using the machine, please check that the nuts and bolts are securely tightened.

7. Always use the equipment as mentioned. If any components are defective while assembling or checking the equipment, or you hear any unusual noises from the equipment during use, stop immediately. Do not use the equipment until the problem has been rectified.

8. Wear appropriate workout clothing while exercising. Do not wear robes or other clothing that could become caught in the machine. Running or aerobic shoes are also required while using the machine.

9. Use the equipment on a flat level, clear surface. Do not use the machine near the water or outdoors.

10. Keep hands away from all moving parts. While lifting or moving the equipment, always do it carefully.

EXPLODED VIEW

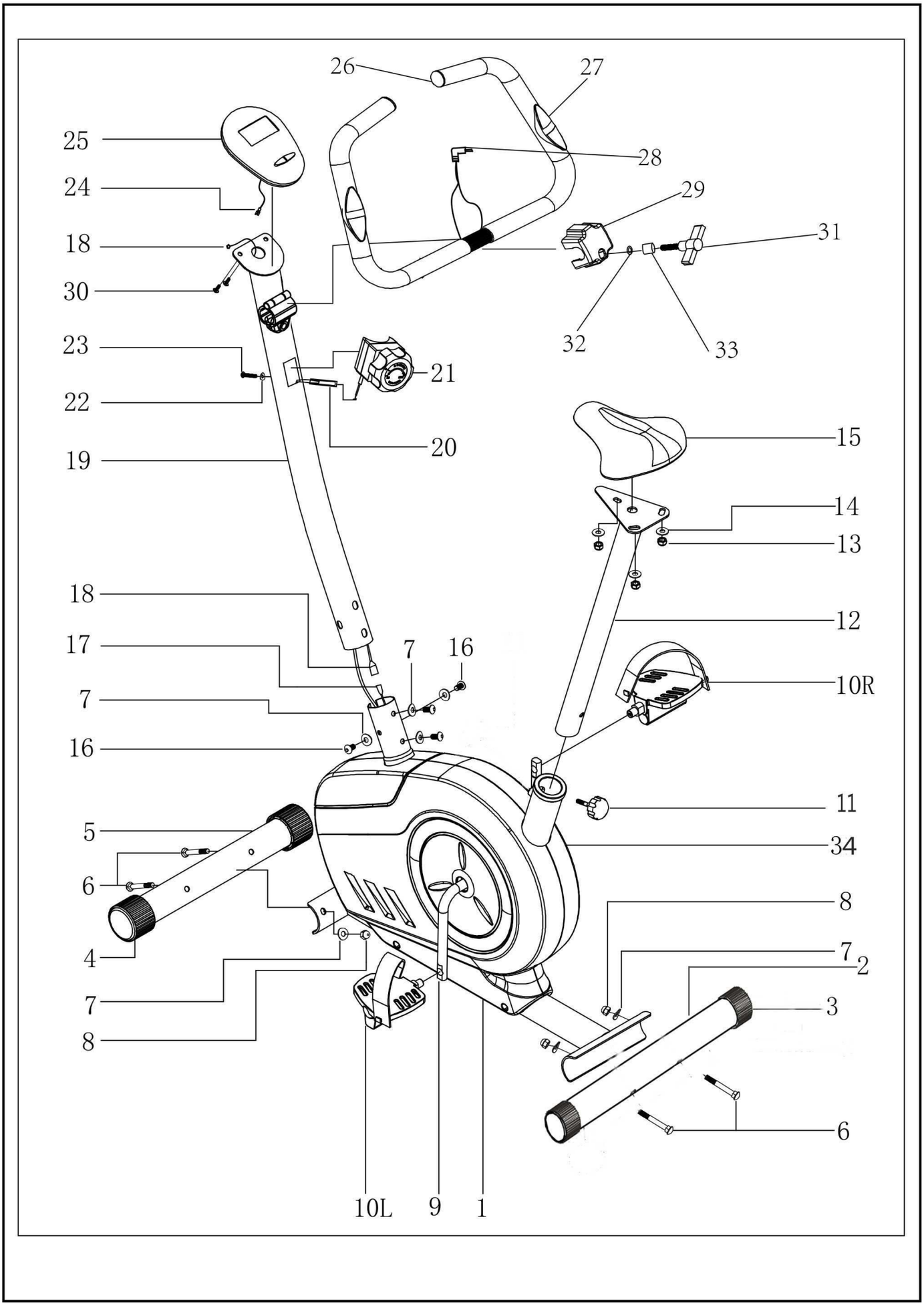

Part List

Part	Description	QTY	Item No.	Description	Qty
1	Main Frame	1	16	Hex Bolt	4
2	Stabilizer	1	17	Sensior Wire	1
3	Rear End Cap	2	18	Lower Sension Wire	1
4	Front End Cap	2	19	Front Post	1
5	Front Stabilizer	1	20	Tension Wire	1
6	Carriage Bolt M8*60	4	21	Tension Knob	1
7	Curved Washer	8	22	Washer 5MM	1
8	Domed Nuts M8	4	23	Bolt M5*40	1
9	Crank	1	24	Upper Sensor Wire	1
10L	Pedal (L)	1	25	Computer	1
10R	Pedal (R)	1	26	Foam	2
11	Saddle Knob	1	27	Handle Pulse	2
12	Seat Support	1	28	Cardio Wire	1
13	Nut M8	3	29	Cover	1
14	Washer	3	30	Bolt of Computer	2
15	Seat	1	31	Cover Knob	1
32	Washer	1	33	Bushing	1
34	Plastic Cover	1			

Istruzioni per l'Assemblaggio

STEP1:

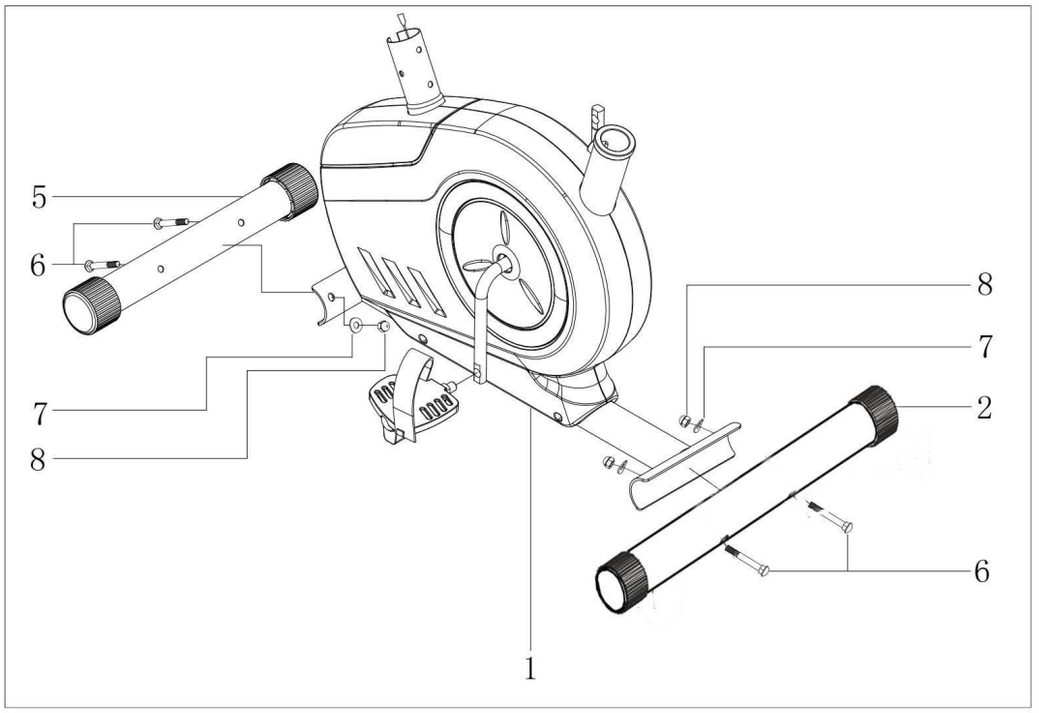

STEP2:

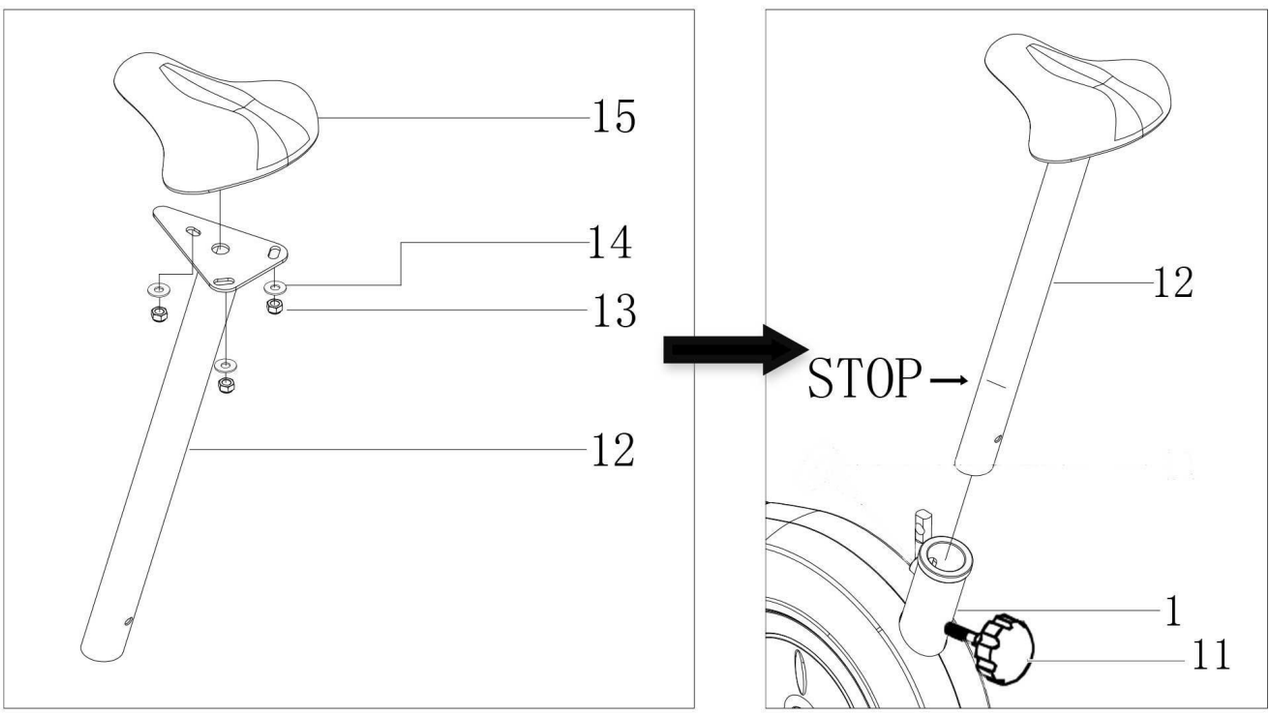

ASSEMBLY INSTRUCTIONS

STEP3:

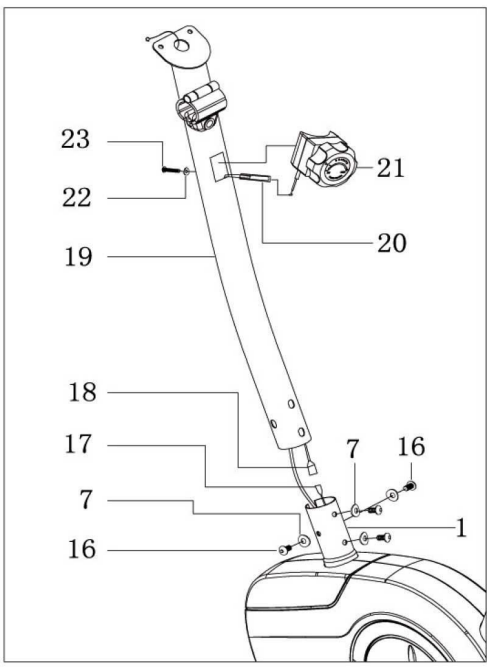

STEP5:

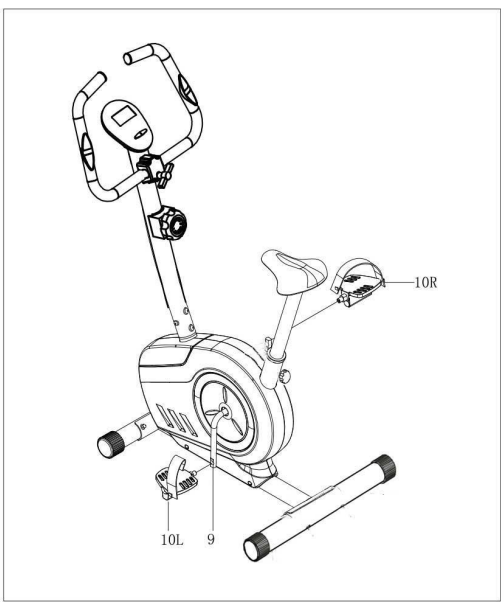
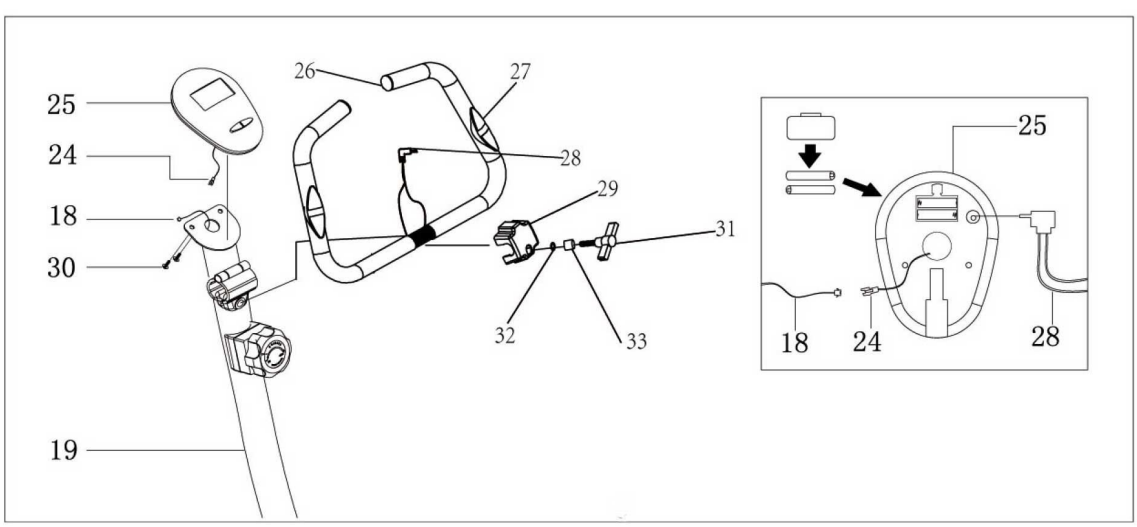
STEP4: